Development of an Instrumentation System for a Laboratory Model Food Product Dryer

*[1]Aye T. Ajiboye, [1]Abdulrahman O. Yusuf and [2]Michael M. Odewole

[1]Department of Computer Engineering, University of Ilorin, Ilorin, Nigeria
[2]Department of Food Engineering, University of Ilorin, Ilorin, Nigeria
{ajiboye.at | yusuf.oa}@unilorin.edu.ng | odewole2005@yahoo.com

Submitted: 29-JAN-2020; Reviewed: 04-MAR-2020; Accepted: 13-MAR-2020

Abstract- To achieve optimal dryer performance, the process parameters required for both the optimization and control of the drying process must be made available via the instrumentation system. A few works have been reported on the development of instrumentation systems for handling drying system parameters. Out of which, some are deficient in the number of drying process parameters that can be handled, while others are unreliable and inaccurate. Therefore, there is the need to develop a microcontroller-based instrumentation system that can monitor, measure, control, display and store the main drying process parameters and sample weight with a high degree of reliability and accuracy. In this study, the sensors were selected based on system specifications and interfaced with the microcontroller. The codes for controlling, logging and displaying of drying parameters were developed and installed on the microcontroller. When tested at steady-state conditions, the system yielded satisfactory results with maximum control and detection errors being 2.0% and 1.8% for the temperature and sample weight, respectively. The developed system can be used for efficient computation of both the dry and wet basis sample moisture content values and also detect the set sample weight.

Keywords- Dryer, Drying parameters, Instrumentation system, Moisture content, Sensor.

1 INTRODUCTION

Drying is the process by which water molecules are extracted from the food material by evaporation. Most dryers have very low thermal efficiencies (Baxi, Patel, & Barve, 2015). The effects of drying air temperature and flow rate on drying sample were investigated by (Beigi, 2016), the results indicate that dehydration time decrease with both the temperature and flow rate while the effect on moisture diffusivity was opposite. It was also revealed that at a constant temperature, energy consumption increases with flow rate but at a constant flow rate, it decreases with temperature. The conclusion from (Beigi, 2016) was that the thermal and drying efficiencies increase with temperature and decrease with an increase in airflow rate.

Ademiluyi *et al.,* (2010) studied the effects of inlet air temperature, inlet air velocity, and feed rate on heat transfer in a rotary dryer during the drying of fermented grounded cassava. The results show that these drying parameters have significant effects on the heat transfer process. The results obtained from the study conducted by (Hanif *et al.,* 2013) on drying of apricots using solar dryer indicates that drying efficiency, moisture lost, drying rate and drying time were significantly affected by both the air mass flow rate and drying temperature The sample drying rate increased with increase in temperature and air velocity but decreased with time (Ndukwu, 2009). Based on the aforementioned effects of drying parameters on the drying process, there is the need for an instrumentation system for drying parameters measurement and control for process optimisation.

*Corresponding Author

A modern instrumentation system consists of digital instruments made of both hardware and software used in monitoring, measuring, displaying, storing and controlling process parameters (Eren & Fung, 2009). The main drying process parameters common to all dryer types are the drying agent temperature, relative humidity (RH) and speed (Kocsis, *et al,* 2011). The use of an instrumentation system can greatly improve the quality, management, operation and efficiency of the drying process as these are functions of drying parameters (Kocsis *et al.,* 2011; Zhang *et al.,* 2013).

The effects of drying parameters on corn drying experiments using pilot dryer were investigated by (Kocsis *et al*., 2011), where the temperature data were measured and collected with a measuring and data collecting system. The degrees of dehydration and airflow rate were respectively determined by a gravimetric method using the dryer in-built scale and an orifice pressure gauge equipped with frequency changer. It should be noted that this manual means of data collection may reduce the accuracy of the results due to direct human intervention. Saikia, Boruah, & Sarma, (2015) developed an instrumentation system sensor network comprising thermocouple and RH -to - voltage converter for temperature and RH sensing respectively in black tea fermentation and drying process. The thermocouple output was conditioned using dedicated signal conditioning, while the RH sensor output signal has been pre-conditioned, thus making both the parameter sensing and signal conditioning stages exist as one entity. Out of many drying parameters, only the temperature and RH were considered as drying process parameters. Zhang *et al*., (2013) instrumented a cross-flow circulation grain dryer for drying parameters detection; the moisture of the drying grains was not globally accounted for as the grains are in different locations and the sensor cannot have direct contact with all the grains at the same time.

© 2020 The Author(s). Published by Faculty of Engineering, Federal University Oye-Ekiti.
This is an open access article under the CC BY NC license. (https://creativecommons.org/licenses/by-nc/4.0/)

http://dx.doi.org/10.46792/fuoyejet.v5i1.474 engineering.fuoye.edu.ng/journal

In Von Gersdorff *et al*., (2018) the sample was taken out of the dryer at a given time interval for weight measurement to determine the sample moisture content. This practice can lead to measurement error and also affect the steady-state condition of the dryer. Darvishi (2017) monitored and measured the weight of the drying sample with a digital analytical balance by putting it at the top of the dryer and suspended the sample tray from the balance using nylon wire via an opening at the top of the dryer. Also, the temperature was monitored and measured using an infrared sensor. Since the balance was adapted but not designed for such an application, the accuracy may be compromised.

Gupta, Sehgal, & Arora, (2013) measured the drying sample weight with a mechanical-based automatic weighing balance that employs linear variable differential transformer, precision full-wave rectifier, summing amplifier and a multi-meter to measure the voltage corresponding to the weight of the drying sample at any time. The air velocity was controlled using two sliding vents to vary the air incoming opening in the suction side of the blower. The system involved too many components comprising of both electrical and mechanical, thereby leading to increased weight and measurement error, while reducing system reliability. Two small cross-flow grain dryers were instrumented by (Han, *et al* 2012) for dryer model predictive control development, which was achieved by sensing the dryer temperature and grain moisture using temperature and moisture sensors respectively. The sensors, controllers, and actuators were distributed and the communication among these nodes was via a RS 485 data bus. Only the temperature and sample moisture were considered, while other process parameters were neglected in their study. Wireless temperature and RH sensors were employed for acquiring both the temperature and RH data in a Tobacco Dryer which was used to develop an ANN for data estimation and prediction (Martínez-Martínez *et al*., 2012a) and process modelling (Martínez-Martínez *et al*., *2012*b). In their study, only the temperature and RH were taken into consideration. other drying process parameters were not considered.

In most of the reviewed works, while some are deficient in the number of drying process parameters that can be handled, others are unreliable and inaccurate due to manual data collection, hence the need for this present study. The microcontroller-based instrumentation system presented here is capable of monitoring, measuring, displaying and storing sample weight and the main drying process parameters (temperature, airflow rate, and RH) with a high degree of reliability and accuracy. The system was programmed to control temperature and detect set sample weight simultaneously.

2 Methodology

2.1 Overview of Dryer Instrumentation System

The stages involved in instrumentation system include sensing using physical parameter sensors and conditioning of the signal by the microcontroller of appropriate capacity for further usage. The model dryer operation was coordinated by using ATMEGA328 microcontroller for the processing of the sensed parameters, as shown in the block diagram of Fig. 1. The choice of the microcontroller was based on low-cost, easy to program and availability. The user set and actual values for the temperature, airflow rate, and sample weight respectively were input to the microcontroller for parameter measurement, display, logging, and control. The RH was sensed, fed into the microcontroller for measurement, display and logging only.

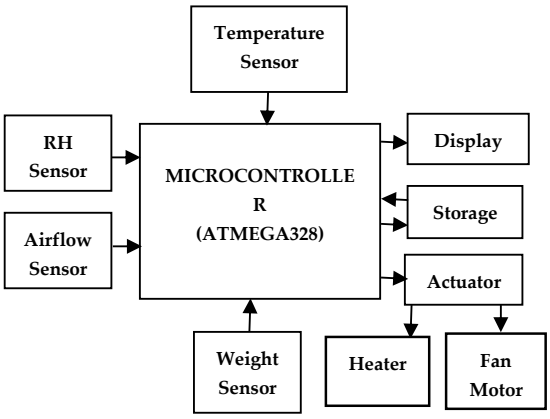

Fig. 1: Block diagram of the dryer instrumentation system

2.2 Sensor Selection

The drier design specifications are as shown in Table 1, which are the major factors normally considered in sensor selection.

Table 1. Dryer design specifications

Drying process parameter	Required range
Temperature (°C)	0 - 80 ±2%
Relative Humidity (%)	0 – 90 ±2%
Sample weight (kg)	0 – 800 ±2%
Airflow rate (m/s)	0 – 10 ±2%

Based on Table 1 and the physical size of the dryer (0.3 m by 0.3 m by 0.68 m), DHT22 sensor was selected for the temperature and RH. Also, 1 kg load cell and Rev. P produced by Modern Device were selected for the sample weight and airflow rate sensing, respectively.

2.3 Temperature Measurement and Control

The dryer temperature was sensed using DHT22 sensor due to its high sensitivity, robustness, and pre-calibration compared to thermocouples. The algorithm of programme code embedded in the microcontroller for monitoring, measuring and controlling dryer temperature is presented in Section 2.6. The control mode employed is a bang-bang control algorithm due to its simplicity. The microcontroller processing speed is higher compared to the drying system's slow response. A hysteresis of 2°C was added to the algorithm to prevent the actuator from repeatedly switching ON and OFF (Martínez-Martínez *et al*., 2012).

© 2020 The Author(s). Published by Faculty of Engineering, Federal University Oye-Ekiti.
This is an open access article under the CC BY NC license. (https://creativecommons.org/licenses/by-nc/4.0/)

http://dx.doi.org/10.46792/fuoyejet.v5i1.474 engineering.fuoye.edu.ng/journal

2.4 Airflow Rate Measurement and Control

The rate at which a variable-speed-motor-driven fan blows drying air into the drying chamber was sensed using Rev. P airflow sensor. Based on the installed programme on the microcontroller shown in Section 2.6, the input signal was processed for display, storage, and control. The airflow rate was selected at the beginning of the experiment by selecting the motor speed corresponding to the required airflow rate from the datasheet (graphs of airflow rate versus motor speed). A closed-loop control scheme was adopted since the airflow rate must remain constant at the set value.

2.5 Sample Weight Measurement and Control

After interfacing the loadcell with the microcontroller via hx711 amplifier, calibration was carried out using a standard weight of known value. A dryer containing three trays was instrumented, therefore each tray has a dedicated loadcell. The initial and final values of the calibration factor of the load cells are shown in Table 2. The sample weight can be detected by selecting the required sample reference weight. The algorithm on which the embedded programme on the microcontroller for weight monitor, measurement and set weight detection was based is as shown in section 2.6.

Table 2. Initial and final values of the calibration factor of the load cells

	Initial values	Final values
Load cell 1	8070	8075
Load cell 2	6790	6590
Load cell 3	8275	8325

2.6 Algorithm for Controlling, Logging and Displaying of Drying Parameters

S1: START
S2: Get Sensed Data from the sensors
S3: Assign variables to sensed data
S4: Get User Set Input
S5: Assign variables to user-set values
S6: If Sensed > User Set deactivate the drier
S7: If Sensed < User Set activate the drier
S8: Display and Log the sensed data
S9: If Reset Pin is high GOTO S2
S10: STOP

2.7 Humidity Measurement

DHT22 sensor was used for the sensing of the dryer cubicle RH due to its compatibility with the microcontroller without the need for a signal conditioning unit. Based on the installed program whose algorithm is shown in section 2.7.1, the signal was processed for display and storage. The complete circuit diagram of the developed drier instrumentation system is as shown in Fig. 2.

2.7.1 Algorithm for Display and Logging of RH

S1: START
S2: Get Sensed Data from the sensors
S3: Assign variables to sensed data
S4: Display and Log the sensed data
S5: STOP

2.8 Determination of Moisture Content

The sample moisture content (MC) which is the amount of water content in the sample can be expressed either as dry basis (MC_D) or wet basis (MC_W). The mathematical expression for these categories of moisture content is as shown in equations (1) and (2) respectively (Raponi *et al*, 2017).

$$MC_D = \frac{M_W}{M_{RSC}} \quad (1)$$

$$MC_W = \frac{M_W}{M_W + M_{RSC}} \quad (2)$$

where M_W and M_{RSC} are the amount of water in the sample and residual solid content in kg respectively. Based on equations (1) and (2) the code for computing, displaying and logging of MC_D and MC_W was developed using the algorithm of section 2.8.1 and coded into the microcontroller.

2.8.1 Algorithm for Calculating, Logging and Displaying MC_D and MC_W

S1: START
S2: GET M_W, M_{RSC}
S3: $MC_D = M_W/M_{RSC}$
S4: $MC_W = M_W/(M_W + M_{RSC})$
S5: Display and Log MC_D, MC_W
S6: STOP

2.9 Logging of Drying Parameters

The logging software interface was developed based on the algorithm shown in Section 2.9.1 using visual C#. The communication between this app and the microcontroller is via serial communication. The logging and the displaying interface are as shown in Fig. 3.

2.9.1 Algorithm for Display and Logging

S1: START
S2: Get data from the microcontroller
S3: Assign variables to the fetch data
S4: Display and Log retrieved data
S5: ST0P

3 Performance Evaluation

To assess the performance of the developed instrumentation system, the dryer was used for drying a sample of 30g of *Telfairia occidentalis* vegetable, the process parameters were monitored, measured and logged at 300 s interval. The experimental setup consisted of the dryer and a personal computer as shown in Fig. 4. The temperature, airflow rate, RH, sample weights, MC_D and MC_W were obtained and each plotted against drying time. For easy analysis of the system performance, the temperature, airflow rate, RH and sample weight on the 3 trays of the dryer were plotted on the same axes as shown in Fig. 5. Similarly, MC_D and MC_W for the 3 trays were plotted on the same axes as shown in Fig. 6. Since the sample to be dried is food material, airflow rate of 6 m/s was adopted (Chandramohan, 2018) and fixed for this experiment.

© 2020 The Author(s). Published by Faculty of Engineering, Federal University Oye-Ekiti.
This is an open access article under the CC BY NC license. (https://creativecommons.org/licenses/by-nc/4.0/)

http://dx.doi.org/10.46792/fuoyejet.v5i1.474 engineering.fuoye.edu.ng/journal

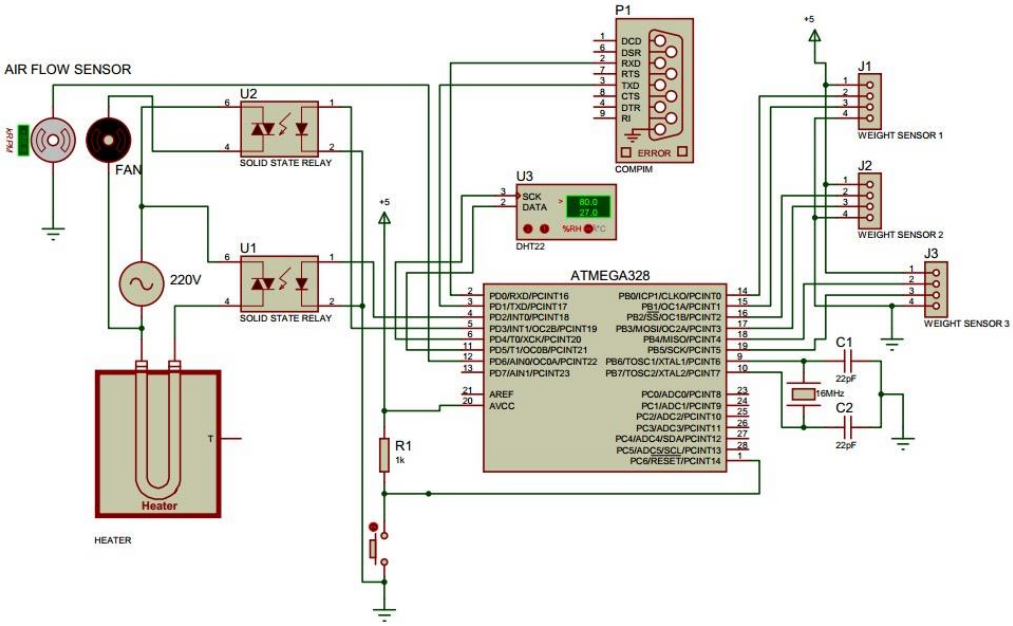

Fig. 2: Circuit diagram of the dryer instrumentation system

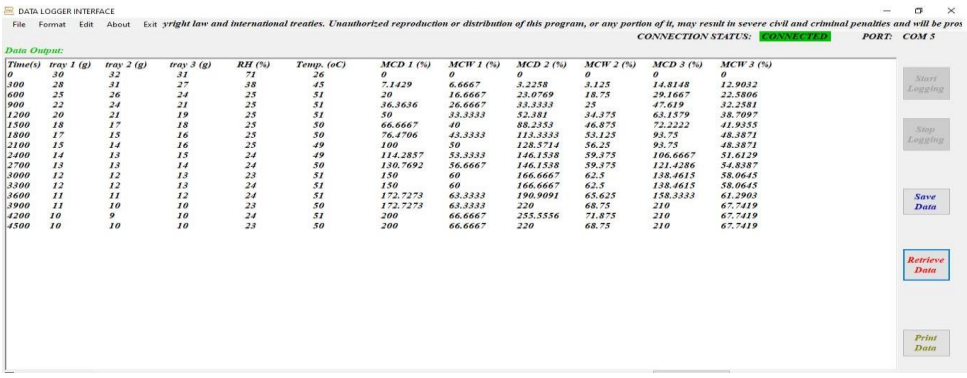

Time(s)	tray 1 (g)	tray 2 (g)	tray 3 (g)	RH (%)	Temp. (oC)	MCD 1 (%)	MCW 1 (%)	MCD 2 (%)	MCW 2 (%)	MCD 3 (%)	MCW 3 (%)
0	30	32	31	71	26	0	0	0	0	0	0
300	28	31	27	38	45	7.1429	6.6667	3.2258	3.125	14.8148	12.9032
600	25	26	24	25	51	20	16.6667	23.0769	18.75	29.1667	22.5806
900	22	24	21	25	51	36.3636	26.6667	33.3333	25	47.619	32.2581
1200	20	21	19	25	51	50	33.3333	52.381	34.375	63.1579	38.7097
1500	18	17	18	25	50	66.6667	40	88.2353	46.875	72.2222	41.9355
1800	17	15	16	25	50	76.4706	43.3333	113.3333	53.125	93.75	48.3871
2100	15	14	16	25	49	100	50	128.5714	56.25	93.75	48.3871
2400	14	13	15	24	49	114.2857	53.3333	146.1538	59.375	106.6667	51.6129
2700	13	13	14	24	50	130.7692	56.6667	146.1538	59.375	121.4286	54.8387
3000	12	12	13	23	51	150	60	166.6667	62.5	138.4615	58.0645
3300	12	12	13	24	51	150	60	166.6667	62.5	138.4615	58.0645
3600	11	11	12	24	51	172.7273	63.3333	190.9091	65.625	158.3333	61.2903
3900	11	10	10	23	50	172.7273	63.3333	220	68.75	210	67.7419
4200	10	9	10	24	51	200	66.6667	255.5556	71.875	210	67.7419
4500	10	10	10	23	50	200	66.6667	220	68.75	210	67.7419

Fig. 3: Software module for logging and displaying

Fig. 4: Drying process experimental setup

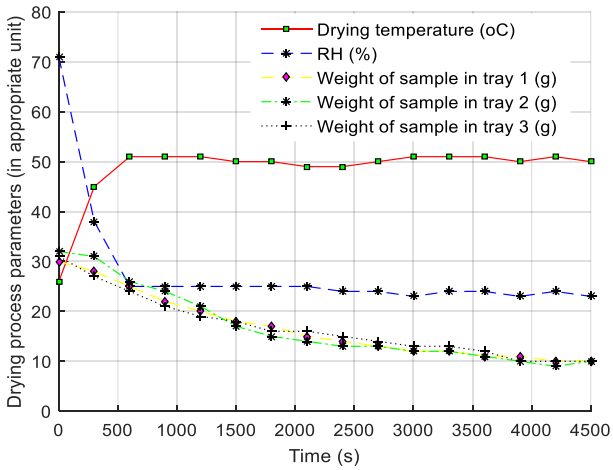

Fig. 5: Plots of drying process parameters against drying time

© 2020 The Author(s). Published by Faculty of Engineering, Federal University Oye-Ekiti.
This is an open access article under the CC BY NC license. (https://creativecommons.org/licenses/by-nc/4.0/)

http://dx.doi.org/10.46792/fuoyejet.v5i1.474 engineering.fuoye.edu.ng/journal

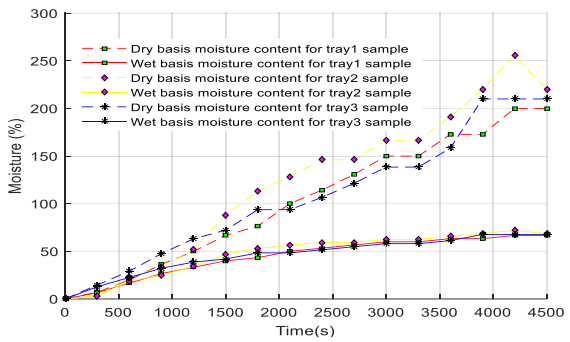

Fig. 6: Plots of moisture content against drying time

4 Results and Discussion

It can be seen from Fig. 5 that the temperature increases from an ambient value of 26°C to the set value of 50°C within 600s of starting the process and remained between 49°C and 51°C at steady-state, giving an error of 1°C (±2% steady-state error). The airflow rate started from 0 s with 0 m/s and rose to a maximum of 6 m/s at 300 s and maintained the value for the remaining time of the experiment. The sample weight also reduces from the initial value of 30 g in each of the 3 trays to the set value of 10.00 g within 3900 s of drying and remained within 9.85 g and 10.18 g between 3900 s and 4500 s given a maximum error of 0.18 g (1.8% steady-state error).

The RH decreased from the initial value of 71% to 26% within 600 s of drying and stayed between the range of 26% - 23% till the end. As revealed in Fig. 6, both the dry basis and wet basis moisture content values increased with increasing drying time. However, the rate at which the dry basis increases is higher compared to that of the wet basis because the base factor of the former reduces with time while that of the latter was constant. It can also be seen from Fig. 6 that the cumulative quantity of moisture removed from the sample increased with drying time until the set value is reached.

The value of the steady-state error obtained for each of the drying parameters considered is a measure of system accuracy. The direct interfacing of all the sensors to the microcontroller to form just a unit in the developed system makes it more reliable compared to a system that involved several separate units integrated.

5 Conclusion

The drying process parameters were identified, and an instrumentation system was developed for a laboratory model dryer. The system was used to measure, display and control, where necessary, the drying process parameters. When tested at steady-state conditions, the system yielded satisfactory results with maximum control and detection errors being 2.0 and 1.8% for the temperature and sample weight, respectively. All the results obtained conform with that of a functional drying system, this confirmed the functionality of the developed system. The developed system will make laboratory drying experiments easy to carry out as many parameters can be determined with a high degree of accuracy and reliability.

References

Ademiluyi, F., Abowei, M., Puyate, Y., & Achinewhu, S. (2010). Effects of drying parameters on heat transfer during drying of fermented ground cassava in a rotary dryer. *Drying Technology, 28*(4), 550-561.

Baxi, H., Patel, A., & Barve, J. (2015). *Modelling and simulation of dryer system.* Paper presented at the 2015 International Conference on Industrial Instrumentation and Control (ICIC).

Beigi, M. (2016). Energy efficiency and moisture diffusivity of apple slices during convective drying. *Food Science and Technology, 36*(1), 145-150.

Chandramohan, V. (2018). *Influence of airflow velocity and temperature on drying parameters: An experimental analysis with drying correlations.* Paper presented at the IOP Conference Series: Materials Science and Engineering.

Darvishi, H. (2017). Quality, performance analysis, mass transfer parameters and modeling of drying kinetics of soybean. *Brazilian Journal of Chemical Engineering, 34*(1), 143-158.

Eren, H., & Fung, C. C. (2009). Instrumentation Systems. *Electrical Engineering, 2*, 376-406.

Gupta, M. K., Sehgal, V., & Arora, S. (2013). Optimization of drying process parameters for cauliflower drying. *Journal of food science and technology, 50*(1), 62-69.

Han, F., Zuo, C., Wu, W., Li, J., & Liu, Z. (2012). Model predictive control of the grain drying process. *Mathematical Problems in Engineering, 2012*, 1-12.

Hanif, M., Rahman, M., Khan, M., Ramzan, M., Amin, M., & Mari, I. (2013). Impact of drying temperatures and air mass flow rates on the drying performance of a Parabolic Trough Solar Collector (PTSC) used for dehydration of apricots. *Emirates Journal of Food and Agriculture*, 418-425.

Kocsis, L., Herdovics, M., Deákvári, J., & Fenyvesi, L. (2011). Corn drying experiments by pilot dryer. *Agronomy Research, 9*(1), 91-97.

Martínez-Martínez, V., Baladrón, C., Gomez-Gil, J., Ruiz-Ruiz, G., Navas-Gracia, L. M., Aguiar, J. M., & Carro, B. (2012). Temperature and relative humidity estimation and prediction in the tobacco drying process using artificial neural networks. *Sensors, 12*(10), 14004-14021.

Martínez-Martínez, V., Ruiz-Ruiz, G., Navas-Gracia, L. M., Gómez-Gil, J., Miñón-Martínez, J., & Blanco, I. (2012). *Monitoring and estimation of tobacco drying variables for process modelling.* Paper presented at the Infomation Technology, Automation and Precision Farming. International Conference of Agricultural Engineering-CIGR-AgEng 2012: Agriculture and Engineering for a Healthier Life, Valencia, Spain, 8-12 July 2012.

Ndukwu, M. C. (2009). Effect of drying temperature and drying air velocity on the drying rate and drying constant of cocoa bean. *Agricultural Engineering International: CIGR Journal*.

Raponi, F., Moscetti, R., Monarca, D., Colantoni, A., & Massantini, R. (2017). Monitoring and optimization of the process of drying fruits and vegetables using computer vision: a review. *Sustainability, 9*(11), 1-27.

Saikia, D., Boruah, P., & Sarma, U. (2015). A sensor network to monitor process parameters of fermentation and drying in black tea production. *Mapan, 30*(3), 211-219.

Von Gersdorff, G., Shrestha, L., Raut, S., Retz, S., Hensel, O., & Sturm, B. (2018). *Impact of processing temperature on drying behavior and quality changes in organic beef.* Paper presented at the IDS 2018. 21st International Drying Symposium Proceedings.

Zhang, L., Cui, H., Li, H., Han, F., Zhang, Y., & Wu, W. (2013). Parameters online detection and model predictive control during the grain drying process. *Mathematical Problems in Engineering*, 1-7.

© 2020 The Author(s). Published by Faculty of Engineering, Federal University Oye-Ekiti.
This is an open access article under the CC BY NC license. (https://creativecommons.org/licenses/by-nc/4.0/)

http://dx.doi.org/10.46792/fuoyejet.v5i1.474 engineering.fuoye.edu.ng/journal