Nigerian Research Journal of Engineering and Environmental Sciences 6(2) 2021 pp. 632-641
p ISSN: 2635-3342; e ISSN: 2635-3350



Nigerian Research Journal of Engineering and Environmental Sciences
Journal homepage: www.rjees.com



Original Research Article

Liquefied Petroleum Gas Concentration Monitoring System with Alarm and Cloud-Based Logging

***Ajiboye, A.T., Opadiji, J.F., Popoola, J.O. and Ajayi, A.R.**

Department of Computer Engineering, University of Ilorin, Ilorin, Kwara State, Nigeria.
*ajiboye.at@unilorin.edu.ng

http://doi.org/10.5281/zenodo.5805213

ARTICLE INFORMATION

Article history:
Received 29 Jun, 2021
Revised 27 Sep, 2021
Accepted 01 Oct, 2021
Available online 30 Dec, 2021

Keywords:
Microcontroller
LPG
MQ-6 gas sensor
Sensor characterization
Sensor dynamics

ABSTRACT

Leakage of liquefied petroleum gas (LPG) has hazardous impacts on human beings which, if not cautiously attended to, can cause fire outbreak and asphyxia when inhaled in high concentration. LPG concentration measurement, monitoring, and control have been vastly researched; however, the aspects of sensor characterization and system performance assessment, using simulation and emulation responses considered in this study have not received adequate attention. The sensor dynamics model equations were used to graphically characterize the MQ-6 gas sensor. The ATMEGA328 microcontroller was used for signal conditioning and data processing due to its low power consumption and high processing speed. An assessment method was employed for the developed system, in which the degree of agreement between the system simulation and emulation responses were used as the metric for the system performance evaluation. The percentage absolute errors between the simulated and emulated responses were 0.02% (minimum) and 2.67% (maximum). The alarm activation occurred at the set value of 1000 ppm of LPG.

© 2021 RJEES. All rights reserved.

1. INTRODUCTION

The importance of LPG in our daily life cannot be overemphasized. It is widely used as a source of energy in domestic, agricultural, and industrial settings (Gupta, 2017). Leakage of LPG has hazardous effects on humans and other living creatures (Shahadat et al., 2019). If not attended to, it can cause explosions, fire outbreaks, and also asphyxia when inhaled in high concentrations (Suyuti et al., 2019). The main challenge of sensing LPG leakage is the difficulty in detection of its odour and colour by human sensory organs (Mallik et al., 2020). Consequently, ethanethiol is normally added to LPG to give it a unique odour thereby making

it detectable through smelling (Chafekar et al., 2018; Folorunso et al., 2019). However, due to the unreliability of human smelling ability, a gas sensor can be used for accurate sensing of gas concentration (Jirage et al., 2016).

Semiconductor-based metal oxide gas sensors, comprising MQ-series and other versions, are popular due to their availability, ease of use (Winsen, 2014), high sensitivity, and low cost (Baha and Dibi, 2009; Popa et al., 2019). Ordinarily, MQ-series gas sensors give a reliable response to LPG concentration in an enclosed space within specified limits of temperature (25-30 °C) and relative humidity (RH) (55 - 65%) (Mallik et al., 2020). Even though enormous research efforts have been made on LPG leakage measurement, monitoring and control, no rigorous attention has been paid to the sensor dynamics modelling, sensor characterization and system performance evaluation using simulation and emulation responses, based on the literature.

IoT-based LPG leakage monitoring and control system was developed in Shahadat et al. (2019), where the LPG leakage was sensed by MQ-series gas sensor. The same type of system was proposed in Meshram et al. (2019). The sensor output of these systems was processed by the node microcontroller unit (MCU). In Shahadat et al., (2019), the processed gas leakage data were logged to the cloud server via router for proper monitoring and retrieval by the administrator. Comparison of the processed LPG leakage concentration data and threshold was carried out in Meshram et al. (2019) by the MCU, which in turn output an appropriate signal based on the errors. The output of the gas pollutant sensor circuit in Rawal, (2019) and Alure et al., (2020) was processed by an MCU. The processed data were compared with the threshold value in Rawal, (2019) while logged into the firebase database in Alure et al. (2020). Based on the result of the comparison the controller activates or deactivates the necessary units and send the system status to the web page through Wi-Fi module. Raspberry Pi 3 was used for LPG leakage concentration data processing and comparison in Lakshmi et al. (2019). Based on the results obtained, an activation signal was sent to activate the required units in the remote location via a Wi-Fi module.

LPG leakage detection system proposed in previous studies used MQ-series gas sensors for sensing the gas leakage concentration (Apeh et al., 2014; Shivalingesh et al., 2014; Raj et al., 2015; Unnikrishnan et al., 2017; Mohapatra et al., 2017; Gase et al., 2018; Ramya et al., 2018; Folorunso et al., 2019; Pavithraa et al., 2019). The outputs of the gas sensor were fed to the microcontroller for processing and the processed data were then compared with the threshold. If the sensed gas concentration is greater than the threshold, the microcontroller among other actions activate the alarm. The gas concentration was also monitored and the situation reported appropriately in the system (Bharade et al., 2017; Ravichandran, 2017; Naik et al., 2018).

In a microcontroller-based LPG leakage concentration monitoring and control system proposed some previous researchers (Ismail et al., 2014; Aishwarya et al., 2017; Natarajan et al., 2017; Siddiqui et al., 2017; Chafekar et al., 2018; Suarsana et al., 2018; Mahmood et al., 2019; Suyuti et al., 2019), the leaked gas concentration was sensed using MQ-4 (Siddiqui et al., 2017), MQ-6 (Ismail et al., 2014; Aishwarya.A et al., 2017; Natarajan et al., 2017; Suyuti et al., 2019), MQ-5 (Chafekar et al., 2018) and MQ-2 (Suarsana et al., 2018; Mahmood et al., 2019) gas sensors. The sensor output signal was processed using a microcontroller through which the gas concentration threshold has been set. When the gas concentration goes above the set value the microcontroller activates the alarm and alert the user, display the status on LCD and also send it as SMS to the designated GSM numbers via GSM module. The gas detector and alarm system developed by Attia and Ali, (2016) and Gupta, (2017) make use of purely discrete electronics components for processing the output signal from the MQ-6 gas sensor circuit. In Attia and Ali, (2016), based on the discrete electronic design, an alarm will be activated when the gas leakage concentration threshold is exceeded. Also, in Gupta, (2017) the output of the sensor circuit was fed to the astable multivibrator mode connected 555-timer circuit in such a way that the circuit is triggered when the gas concentration is greater than the threshold value. The timer output is connected to the base of a transistor switching circuit on which a solenoid-based siren alarm is connected as a load which make the alarm to be ON when the circuit is triggered.

Sensor circuit characterisation and system performance evaluation using simulation and emulation responses were not addressed in any of the reviewed works found in the literature. Due to these research gaps, a sensor

dynamics model was employed in this study to graphically characterize the MQ-6 gas sensor. The ATMEGA328 microcontroller was used for central processing (signal conditioning and data processing). An alternative method of assessing system performance in which the system simulation and emulation responses were used as the ideal and the actual system output respectively were employed in this study.

2. MATERIALS AND METHODS

2.1. Design Specification and Overview of the Proposed System

The proposed system should be able to monitor the LPG concentration level between 200 and 10000 ppm. The alarm unit becomes active when the sensed concentration equals 1000 ppm which is the allowable concentration level (1000 ppm) for the human environment (Yan and Rahayu, 2014) and remains active until it is reset or the concentration goes below 1000 ppm. More so, the operational temperature and relative humidity are 27.5 ^{o}C $\pm$ 2.5 ^{o}C and 60% $\pm$ 5%, respectively (Hanwei, 2019). The system consists of a sensing unit (SU), signal conditioning unit (SCU), data processing unit (DPU), a display unit (DU), power supply (PS) and alarm unit (AU) as well as a Wi-Fi Module (WFM), which links the system with the remote personal computer (PC) via cloud server (CS) as shown in Figure 1.

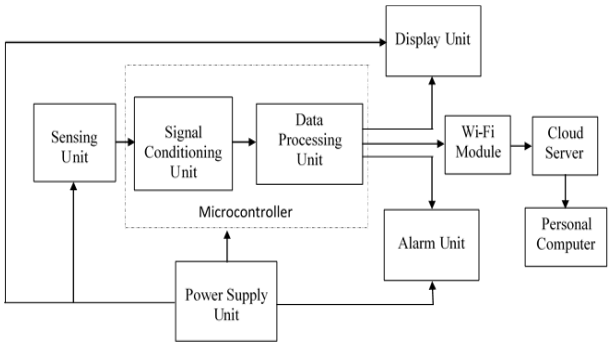

Figure 1: Block diagram of the proposed system

The SU is the sensor circuit made up of MQ-6 gas sensor and its associated load resistor. The sensor selection is based on its high sensitivity to LPG concentration, long life span, low cost and simple drive circuit (Winsen, 2014; Hanwei, 2019) The SCU and DPU are integrated using microcontroller and associated software. The SU output voltage serves as the input to the SCU. Based on the SCU output voltage and gas concentration relationship equation (Ajiboye et al., 2021) the DPU processes the output voltage from the SCU. The output of DPU in turn serves as input to DU and AU. An alert is produced by AU once the gas concentration limit is attained. The PS unit provides the required system power as shown in the interconnection of system units presented in Figure 1.

2.2. Characterization of MQ-6 Gas Sensor Dynamics

The MQ-series gas sensor model equations (1 to 3) were used for the sensor characterisation (Ajiboye et al., 2021).

$$R_S = 10^{(m\log_{10}(x)+\log_{10}(c)+\log_{10}(Ro))} \quad (1)$$

Where R_S = the sensor resistance ($k\Omega$), R_o = the sensor resistance for base gas concentration at standard temperature and RH ($k\Omega$), m = slope of the LPG sensitivity curve, x = concentration of the gas (ppm), c = $10\hat{}q$ and q = intercept of the LPG sensitivity cuve with $\frac{R_S}{R_O}$ axis

$$V_{RL} = \frac{R_L V_{CC}}{(R_S + R_L)} \quad (2)$$

Where V_{CC} = the activation voltage (V), V_{RL} = the sensor circuit output voltage (V) and R_L = the load resistance ($k\Omega$).

$$V_{RL} = \frac{R_L V_{CC}}{(10^{(m\log_{10}(x)+\log_{10}(c)+\log_{10}(Ro))} + R_L)} \quad (3)$$

The two variables of interest are V_{RL} and x; therefore Equation (3) that connect these two variables was modified for ease of data processing. This was achieved by generating the mathematical function that best fit the curve obtained by plotting V_{RL} against x via curve fitting. Since x is the system variable to be both measured and monitored, it must, therefore, be expressed as a function of the sensor output voltage as shown in Equation (4).

$$x = \left(\frac{23.09}{21.59 - V_{RL}}\right)^{\left(\frac{1}{0.02628}\right)} \quad (4)$$

2.3. Selection and Programming of Microcontroller

The ATMEGA328 microcontroller from Microchip was used as the central processing unit. This microcontroller was selected in this study due to its inherent characteristics which include low power consumption and high processing speed (Atmel, 2015). The complete circuit diagram for the developed system is as shown in Figure 2 with the analogue input voltage from the sensor circuit fed to the microcontroller and the output digital value of the gas concentration goes out of the microcontroller and fed to the display. Also, the AU and WFM are fed from one output pin each. For effective coordination of the system activities, a programme was written for: (i) determining the gas concentration in terms of sensor circuit output voltage using Equation (4), (ii) displaying the gas concentration value on LCD, (iii) logging the gas concentration value to the cloud and (iv) activating the alarm unit when the threshold concentration value is reached. The flow chart that shows the step-by-step execution of the programme leading to the achievement of the system overall goal is as shown in Figure 3.

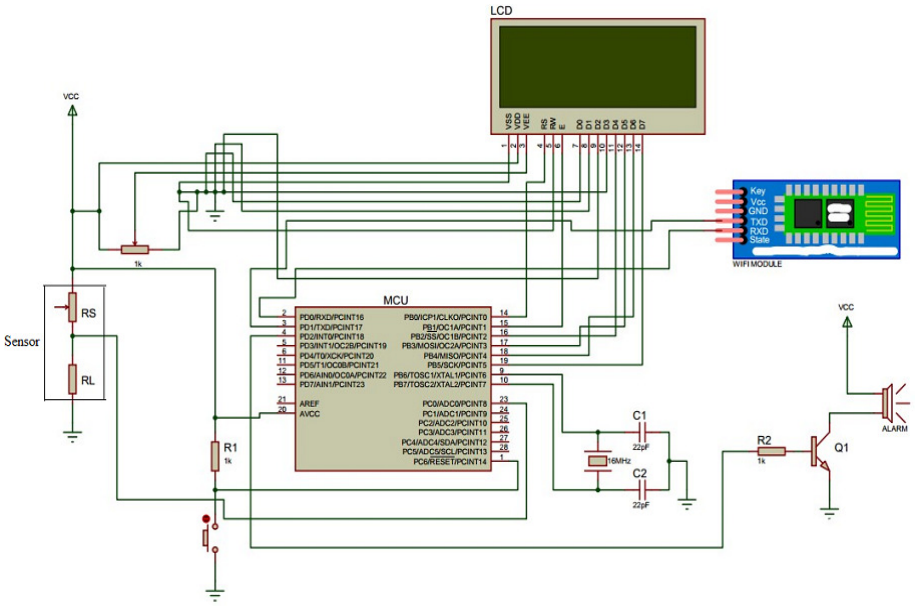

Figure 2: Circuit diagram of the LPG concentration monitoring system with alarm and cloud-based logging facilities

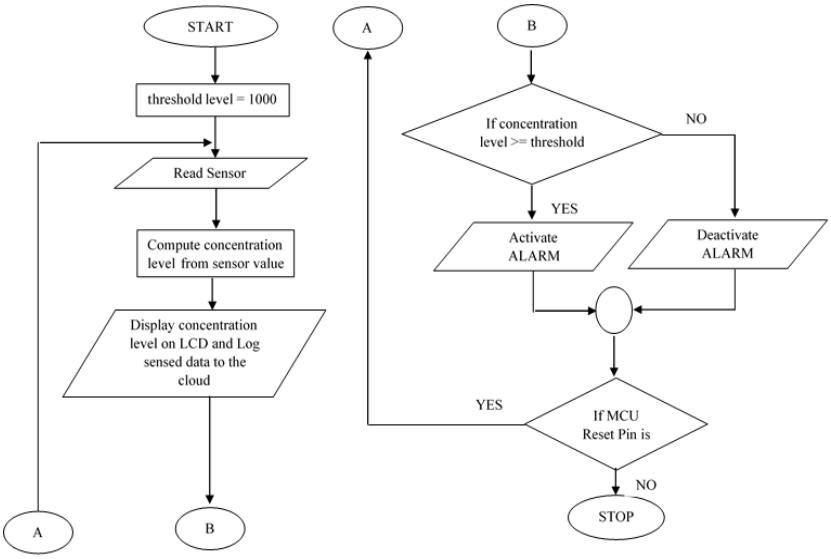

Figure 3: System programme execution flow chart

2.4. System Simulation and Emulation

Rigorous testing and performance analysis of the developed system requires specialized instrument, which is not easily available in the Third World countries due to high costs of acquisition. Therefore, simulation and emulation were respectively carried using Equation (4) and the experimental setup shown in Figure 4. The setup consists of a digital meter, the developed system, variable dc PS unit and a laptop PC. The developed system was powered from a constant +5V dc source inside the system and the output of the variable power supply was connected to pin 23 of the microcontroller to mimic the sensor circuit output voltage. Then the voltage from the variable power supply was varied within 1.545 V and 3.455 V, which is the expected output voltage range from the SU and the system output recorded.

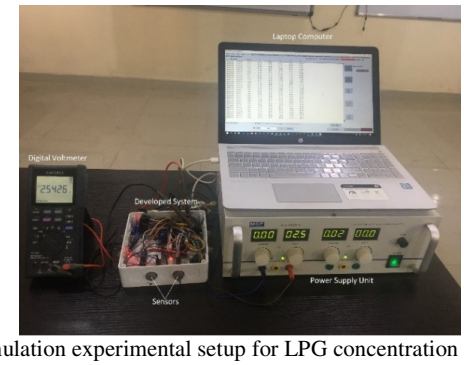

Figure 4: The emulation experimental setup for LPG concentration monitoring system

2.5. Cloud Storage for LPG Concentration Data

In this study, the online platform was developed using Ruby on Rails and node.js while the cloud database was developed using python 3. The processed LPG concentration data was transmitted to the cloud database for storage via the wi-fi module using Hypertext transfer protocol secure. The stored data can be viewed in real-time and also accessed using network devices that have the access protocol. The data logged into the

cloud database can be downloaded as JavaScript object notation (JSON) file or Comma-separated values (CSV) file format which is easily accessible using Microsoft Excel Software or Notepad.

2.6. System Testing

The functionality of the alarm and LCD units of the developed system was tested using the experimental setup shown in Figure 4, by varying the input voltage to the microcontroller from the sensor emulator from minimum to maximum expected values from the SU (1.545 V to 3.455 V). The gas concentration level as displayed on both the laptop PC and LCD and also the value of the concentration at which the alarm was activated were monitored. To test the data logging and retrieval stage of the system, the sample of LPG concentration data were logged into the cloud and later downloaded via the laptop PC serial terminal interface, the value and format of the uploaded and downloaded data were then compared.

3. RESULTS AND DISCUSSION

The response of R_S to x, V_{RL} to R_S and V_{RL} to x was obtained using Equations (1), (2), and (3) respectively; where $V_{CC} = 5V$, R_O=23.065 kΩ and $R_L = 20\ k\Omega$ for MQ-6 gas sensor (Hanwei, 2019) and is as shown in Figures 5, 6 and 7 respectively.

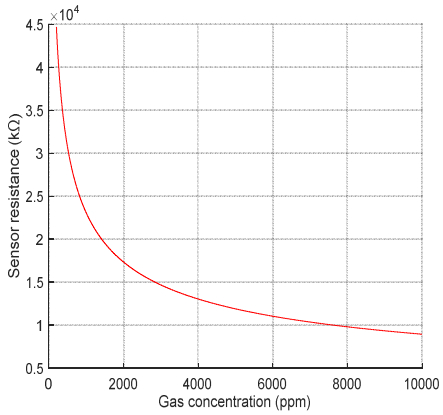

Figure 5: Graph of sensor resistance against the gas concentration

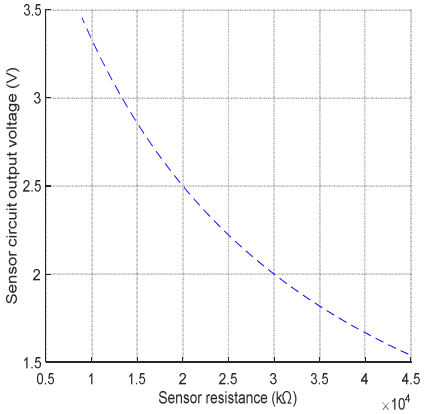

Figure 6: Plot of sensor circuit output voltage against sensor resistance

It can be seen from Figure 5, that R_S decreases as x increases with a maximum value of 44.72 kΩ corresponding to a minimum concentration of 200 ppm. The resistance decreased to a minimum value of 8.944 kΩ at the maximum concentration of 10000 ppm which shows that the sensor resistance is inversely proportional to the gas concentration (Sakayo et al., 2019). It was revealed in Figure 6 that the voltage decreased with an increase in sensor resistance which confirm the results obtained by Sakayo et al. (2019). The maximum and minimum values of the sensor circuit output voltage were 3.455 V and 1.545 V, respectively, corresponding to sensor resistance values of 8.944 kΩ and 44.72 kΩ.

Using MATLAB curve fitting APPS the best curve that fit the curve of Figures 7 was obtained with an R-squared value of 0.9998. The corresponding generated mathematical function is power 2 with 95% confidence bounds and is as shown in Equation (5).

$$V_{RL} = -23.09x^{-0.02628} + 21.59 \tag{5}$$

As can be seen, Equation (5) is the system model equation that directly relates the output voltage with the gas concentration. The advantage of using Equation (5) over Equation (3) is that Equation (5) is in a more compact form compared to Equation (3) as it contains a smaller number of parameters and variables.

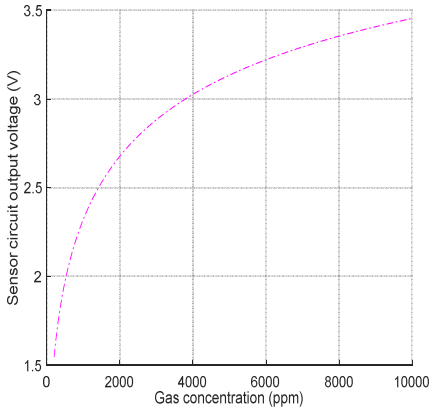

Figure 7: Plot of sensor circuit output voltage against the gas concentration

As can be observed from Figure 7, the sensor circuit output voltage increased with an increase in gas concentration which is in agreement with the results obtained by Sakayo et al. (2019). The minimum and maximum obtainable voltages were 1.545 and 3.455 V, respectively, which corresponded to a gas concentration of 200 and 10000 ppm. The mathematical function generated via the fitting process; Equation (5) yielded the same results as that of Equation (3) but with less processing effort as the former contains a smaller number of parameters.

The plots of gas concentration versus the sensor output voltage (both simulated and emulated) are shown in Figure 8. The simulated and emulated data values were assumed to be the reference and actual respectively and the plot of their absolute error versus gas concentration is also shown in Figure 9. From the simulated and emulated system responses shown in Figure 8, the minimum and maximum gas concentration obtained for the simulated response were 200 and 10000 ppm at corresponding voltages of 1.545 and 3.455 V respectively. Also, for the emulated system the minimum and maximum gas concentration obtained were 196 and 10020 ppm, respectively corresponding to 1.545 and 3.455 V. Using Figure 9, the minimum and maximum percentage absolute errors were determined to be 0.02 and 2.67%, respectively which correspond to the gas concentration of 200 and 1387 ppm.

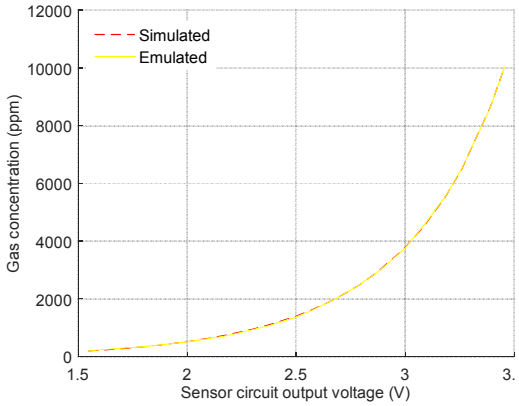

Figure 8: Plots of gas concentration versus sensor circuit output voltage

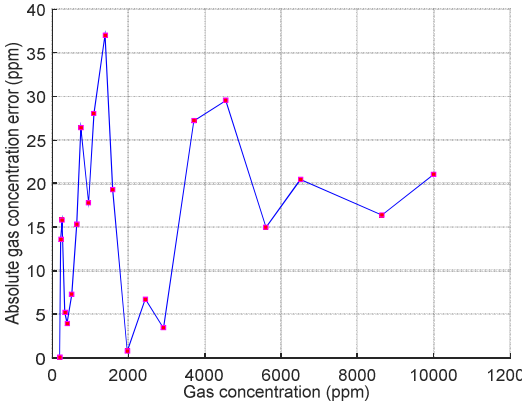

Figure 9: Plot of gas concentration absolute error versus gas concentration

The displayed data on LCD is the same as that on the laptop screen when viewed simultaneously which shows that the LCD is functioning well. The alarm triggered at the set gas concentration value of 1000 ppm

as expected. Finally, the logged and retrieved data are the same both structurally and numerically when compared.

In this study, the results were obtained based on a rigorous analysis of sensor dynamics which makes the results to be reliable and repeatable unlike in some other reported work (Yan and Rahayu, 2014; Attia and Ali, 2016; Mohapatra et al., 2017; Aishwarya et al., 2017; Bharade et al., 2017; Gupta, 2017; Unnikrishnan et al., 2017; Gase et al., 2018; Folorunso et al., 2019) in which the sensor dynamics were not fully analysed and characterised. With these results, the developed system can adequately serve as LPG measurement and monitoring device.

4. CONCLUSION

The sensor dynamics was graphically characterised for easy analysis. The study revealed that the sensor resistance reduces with an increase in gas concentration. Also, sensor circuit output voltage reduces as the sensor resistance increases; whereas the former increases as the gas concentration increases. The response of the developed system was further simulated and emulated, and the minimum and maximum percentage absolute errors between the two system responses were 0.02% and 2.67%, respectively corresponding to the gas concentration of 200 and 1387 ppm. The data obtained from the responses of the system simulation and emulation were used as alternative data for system performance evaluation. The alarm unit was activated when the increment of gas concentration value reached 1000 ppm which is the set threshold value. The consistency of the logged data into the cloud with the retrieved data from the cloud was also confirmed in this study. With the obtained results, the developed system has the potentials of adequately serving the purpose of an alternative solution for LPG concentration measurement and monitoring device in the Third World countries due to its low-cost, simplicity and availability.

5. ACKNOWLEDGMENT

The authors wish to acknowledge the contributions of all the Technologists in the Hardware Laboratory of the Department of Computer Engineering, University of Ilorin, Ilorin, Nigeria during the construction and testing of the developed system.

6. CONFLICT OF INTEREST

There is no conflict of interest associated with this work.

REFERENCES

Aishwarya, A. M., Meghana, R. B. and Prasad, R. K. (2017). LPG Gas Leakage Detection and Prevention System. *International Journal on Future Revolution in Computer Science & Communication Engineering (IJFRCSCE), 3*(8), pp. 1-4.

Ajiboye, A., Opadiji, J., Yusuf, A. and Popoola, J. (2021). Analytical determination of load resistance value for MQ-series gas sensors: MQ-6 as case study. *Telkomnika, 19*(2), pp. 575-582.

Alure, S. M., Tonpe, R. V., Jadhav, A. D., Sambare, S. T. and Pagare, J. D. (2020). Drainage Toxic Gas Detection System Using IoT *ICT Systems and Sustainability* (pp. 161-167): Springer.

Apeh, S., Erameh, K. and Iruansi, U. (2014). Design and development of kitchen gas leakage detection and automatic gas shut off system. *Journal of Emerging Trends in Engineering and Applied Sciences (JETEAS), 5*(3), pp. 222-228.

Atmel. (2015). ATmega328P [Datasheet]. In A. C. www.atmel.com vol. 7810D-AVR-01/15, Ed., ed. USA: Atmel Corporation (Ed.), (pp. 1-294).

Attia, H. A. and Ali, H. Y. (2016). Electronic Design of Liquefied Petroleum Gas Leakage Monitoring, Alarm, and Protection System Based on Discrete Components. *International Journal of Applied Engineering Research, 11*(19), pp. 9721-9726.

Baha, H. and Dibi, Z. (2009). A novel neural network-based technique for smart gas sensors operating in a dynamic environment. *Sensors, 9*(11), pp. 8944-8960.

Bharade, U., Jain, V., Chavan, S., Bangade, S. and Mahajan, J. (2017). Gas Leakage Detection Alerting and Monitoring using IoT. *International Journal of Advance Engineering and Research Development, 4*(12), pp. 2348-6406.

Chafekar, Z., Khan, M. H., Lakra, K. and Dhonde, S. (2018). Implementation of automatic gas accident prevention system using arduino and gsm. *International Journal of Computer Applications, 180*(47), pp. 5-7.

Folorunso, C. O. Raheem, W. A., Akinyemi, L. A. and Raji, A. A. (2019). Development of a liquidified petroleum gas leakage detector, Level indicator and Automatic shutdown system. *Covenant Journal of Engineering Technology, 3*(2), pp. 14-30.

Gase, A., Mesare, B., Datir, S. and Mankar, D. (2018). Microcontroller Based LPG Gas Detector & Monitoring System. *International Journal for Scientific Research & Development (IJSRD), 6*(2), pp. 72-74.

Gupta, A. (2017). Economical and optimal gas leakage detection and alert system. *International Journal of Scientific and Research Publications, 7*(11), pp. 260-263.

Hanwei. (2019). Technical Data MQ-6 Gas Sensor. In: E. H. Sensors, ed. China: Hanwei Sensors (Ed.), pp. 1-2.

Ismail, T., Das, D., Saikia, J., Deka, J. and Sarma, R. (2014). GSM based gas leakage warning system. *International Journal of Advanced Research in Computer and Communication Engineering, 3*(4), pp. 6293-6298.

Jirage, G. B., Jadhav, B. T. and Kadam, P. A. (2016). Calibration of Combustible and toxic Gas Sensor for Industrial Applications. *International Journal of Innovative and Emerging Research in Engineering, 3*(11), pp. 14-19.

Lakshmi, P. K. M., Sri, P. A. and Krishna, P. G. (2019). An IOT Based LPG Leakage Sensing and Alerting System. *International Journal of Innovative Technology and Exploring Engineering (IJITEE), 8*(6), pp. 2278-3075.

Mahmood, S. N., Ishak, A. J. and Hussain, S. T. (2019). GSM based gas leak monitoring system. *Periodicals of Engineering and Natural Sciences, 7*(2), pp. 670-678.

Mallik, A., Ahmed, S., Hossain, G. and Rahman, M. (2020). IoT Utilized Gas-Leakage Monitoring System with Adaptive Controls Applicable to Dual Fuel Powered Naval Vessels/Ships: Development & Implementation. *Cybernetics and Information Technologies, 20*(1), pp. 138-155.

Meshram, P., Shukla, N., Mendhekar, S., Gadge, R. and Kanaskar, S. (2019). IoT Based LPG Gas Leakage Detector. *International Journal of Scientific Research in Computer Science, Engineering and Information Technology, 5*(1), pp. 531-534.

Mohapatra, B. N., Dash, A. and Chaubey, D. K. (2017). LPG Gas Auto Booking By GSM and Leakage Detection with Auto Switchable Exhaust Fan. *International Journal of Science, Engineering and Technology Research (IJSETR), 6*(3), pp. 408-411.

Naik, R. N., Reddy, P. S. N., Kishore, S. N. and Reddy, K. T. K. (2018). Arduino Based LPG gas Monitoring & Automatic Cylinder booking with Alert System. *Journal of Electronics and Communication Engineering (IOSR-JECE), 11*(4), pp. 6-12.

Natarajan, S., Deshpande, P., Gole, P. and Bhosale, P. (2017). LPG Gas Detector and Prevention. *International Journal of Current Research, 9*(10), pp. 60140-60142.

Pavithraa, M., Priya, K., Priya, M. and Jenifer, Z. (2019). IOT Based LPG Gas Booking And Monitoring SYSTEM. *International Research Journal of Engineering and Technology (IRJET), 6*(3), pp. 904-906.

Popa, A., Hnatiuc, M., Paun, M., Geman, O., Hemanth, D. J., Dorcea, D. and Ghita, S. (2019). An intelligent IoT-based food quality monitoring approach using low-cost sensors. *Symmetry, 11*(3), pp. 1-18.

Raj, A., Viswanathan, A. and Athul, T. (2015). LPG gas monitoring system. *International Journal of Innovative Technology and Research, 3*(2), pp. 1957-1960.

Ramya, P., Praveena, V., Keerthiga, S. and Suresh, A. (2018). Smart Gas Level Monitoring, Leakage Detection and Registration over IoT. *International Journal of Advanced Research in Science and Engineering (IJARSE), 7*(1), pp. 438-443.

Ravichandran, S. (2017). Cloud connected smart gas cylinder platform senses LPG gas leakage using IOT application. *International Journal of MC Square Scientific Research (IJMSR), 9*(1), pp. 324-330.

Rawal, R. (2019). Air Quality Monitoring System. *International Journal of Computational Science and Engineering, 9*(1), pp. 1-9.

Sakayo, N. M., Mutuku, J. N. and Ngaruiya, J. M. (2019). Design and Calibration of a Microcontroller Based MQ-4 Gas Sensor for Domestic Cooking Gas System. *International Journal of Applied Physics,* 6(2), pp. 31-40.

Shahadat, M. M., Mallik, A. and Islam, M. (2019). Development of an automated gas-leakage monitoring system with feedback and feedforward control by utilizing IoT. *Facta universitatis-series: Electronics and Energetics, 32*(4), pp. 615-631.

Shivalingesh, B., Ramesh, C., Mahesh, S., Pooja, R., Preethi, K. M. and Kumuda, S. (2014). LPG Detection Measurement and Booking System. *International Journal of Research and Scientific Innovation, 1*(6), pp. 7-10.

Siddiqui, S. and Mishra, K. M. (2017). LPG Leakage Detection and Prevention. *Imperial Journal of Interdisciplinary Research (IJIR), 3*(5), pp. 1084-1086.

Suarsana, K. B., Gunawan, A. A. N. and Ratini, N. N. (2018). LPG Leakage Control Using SMS through SIM800L with MQ-2 Sensor and Stepper Motor Based on Arduino UNO. Pp 15-18.

Suyuti, A., Ahmad, A., Umraeni, E. and Salam, A. (2019). Intelligent system of LPG gas leakage detection for web-based living house security. *ICIC express letters. Part B, Applications: an international journal of research and surveys, 10*(2), pp. 89-96.

Unnikrishnan, S., Razil, M., Benny, J., Varghese, S. and Hari, C. (2017). *LPG monitoring and leakage detection system.* Paper presented at the 2017 International Conference on Wireless Communications, Signal Processing and Networking (WiSPNET). pp 1990-1993.

Winsen. (2014). Flammable Gas Sensor (Model: MQ-6). In E. L. Zhengzhou Winsen Electronics Technology Co., ed. China: Zhengzhou Winsen Electronics Technology Co., Ltd (Ed.), pp. 1-7.

Yan, H. H. and Rahayu, Y. (2014). *Design and development of gas leakage monitoring system using arduino and zigbee.* Paper presented at the 1st International Conference on Electrical Engineering, Computer Science and Informatics 2014. pp. 207-212.